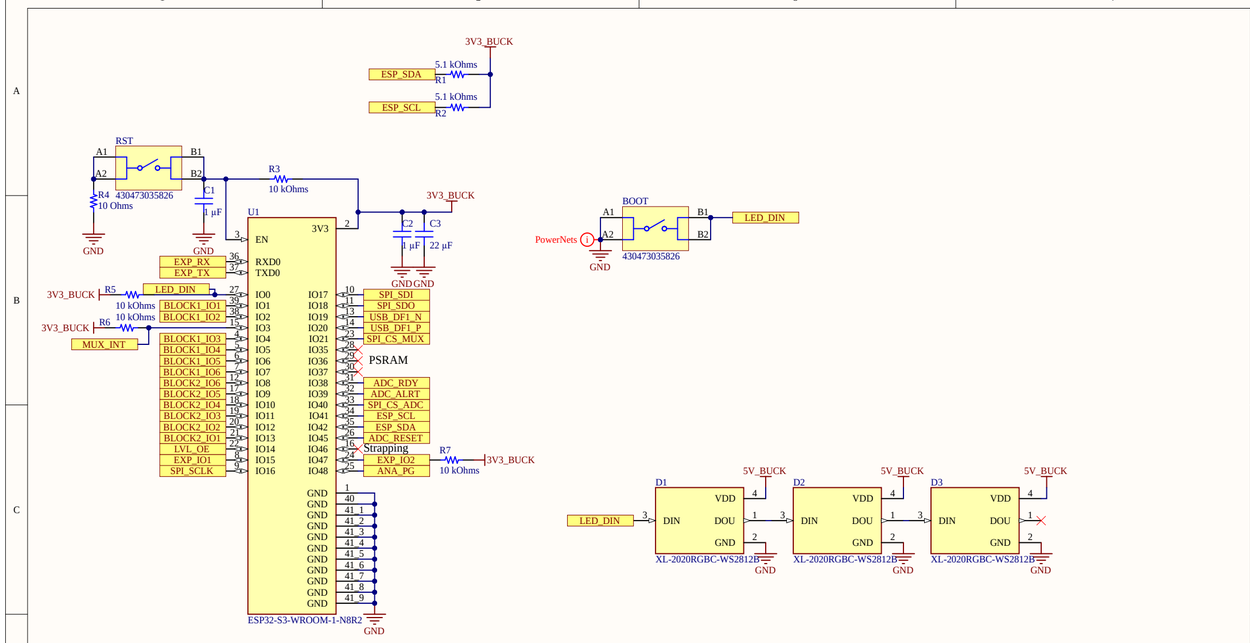

Title		
ESP32		
Size: A4	Number: 1	Revision: A
Date: 3/31/2026	Sheet of	
File: C:\Users\..\ESP32.SchDoc	Drawn By: Lorenzo	

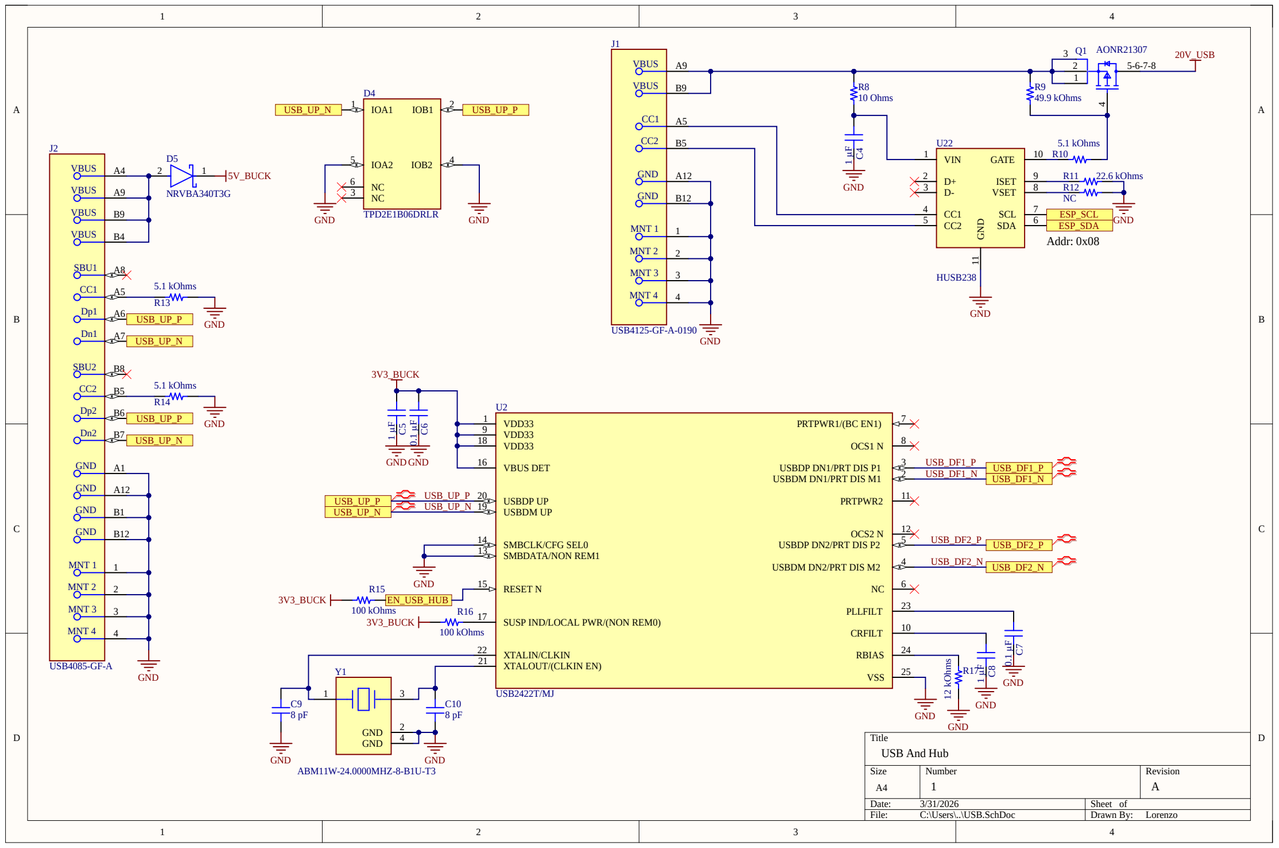

Title		
USB And Hub		
Size: A4	Number: 1	Revision: A
Date: 3/31/2026	Sheet of	
File: C:\Users\..\USB.SchDoc	Drawn By: Lorenzo	

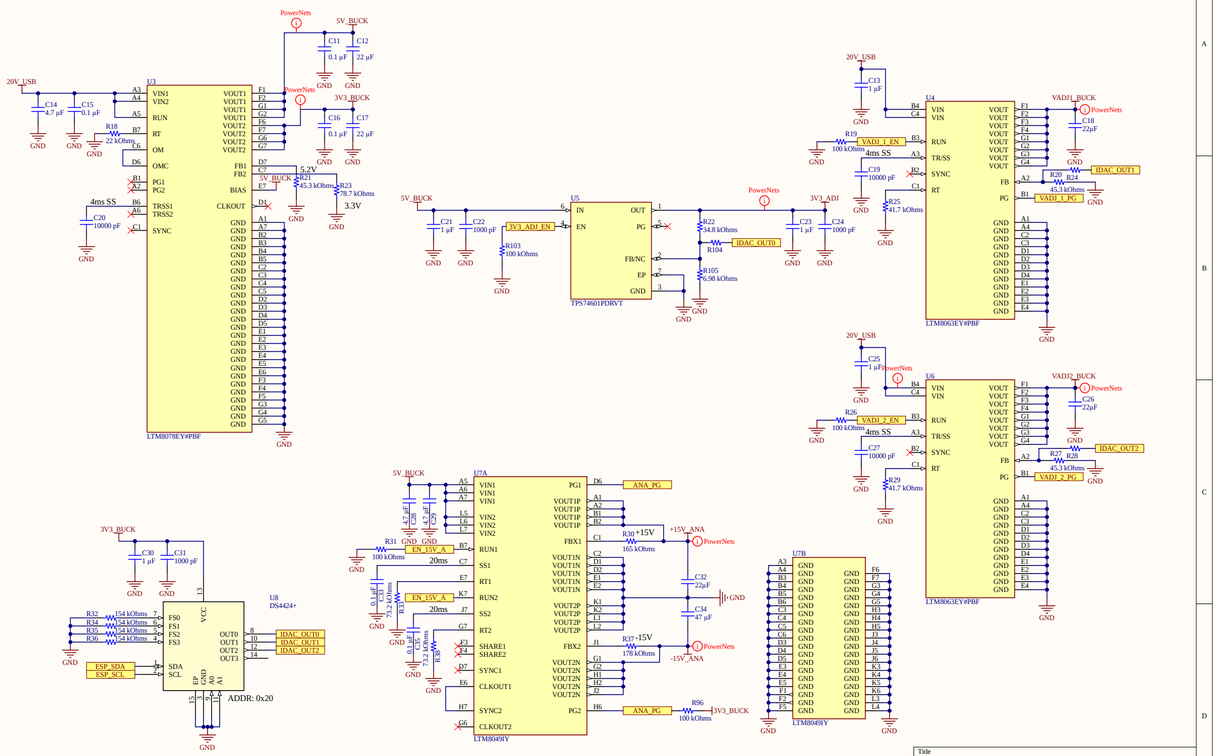

Title		
Power and Adjustments		
Size A3	Number 1	Revision A
Date: 3/31/2026		Sheet of
File: C:\Users\..\Power.SchDoc		Drawn By: Lorenzo

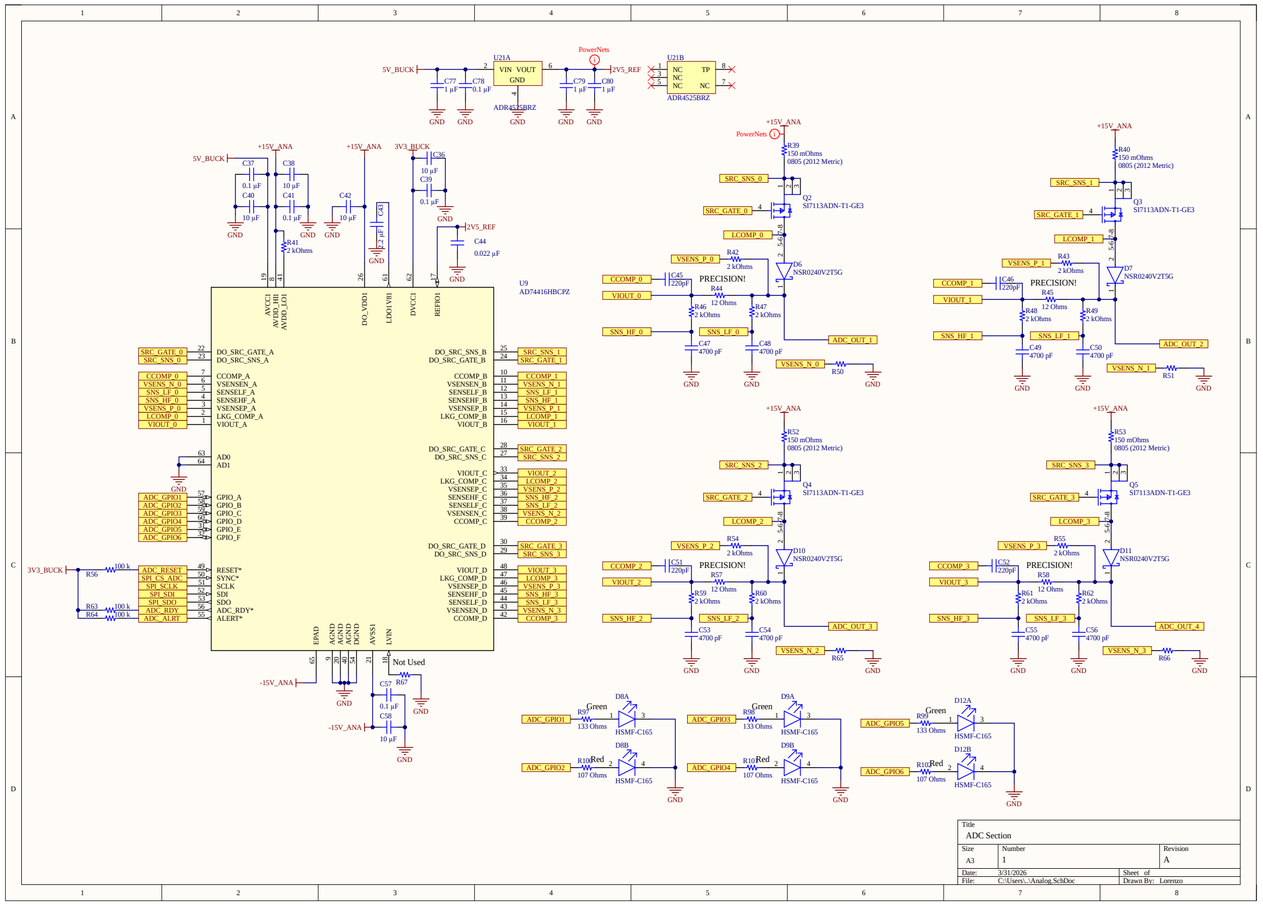

Title		
ADC Section		
Size: A3	Number: 1	Revision: A
Date: 3/31/2026		Sheet of
File: C:\Users\..\Analog.SchDoc		Drawn By: Lorenzo

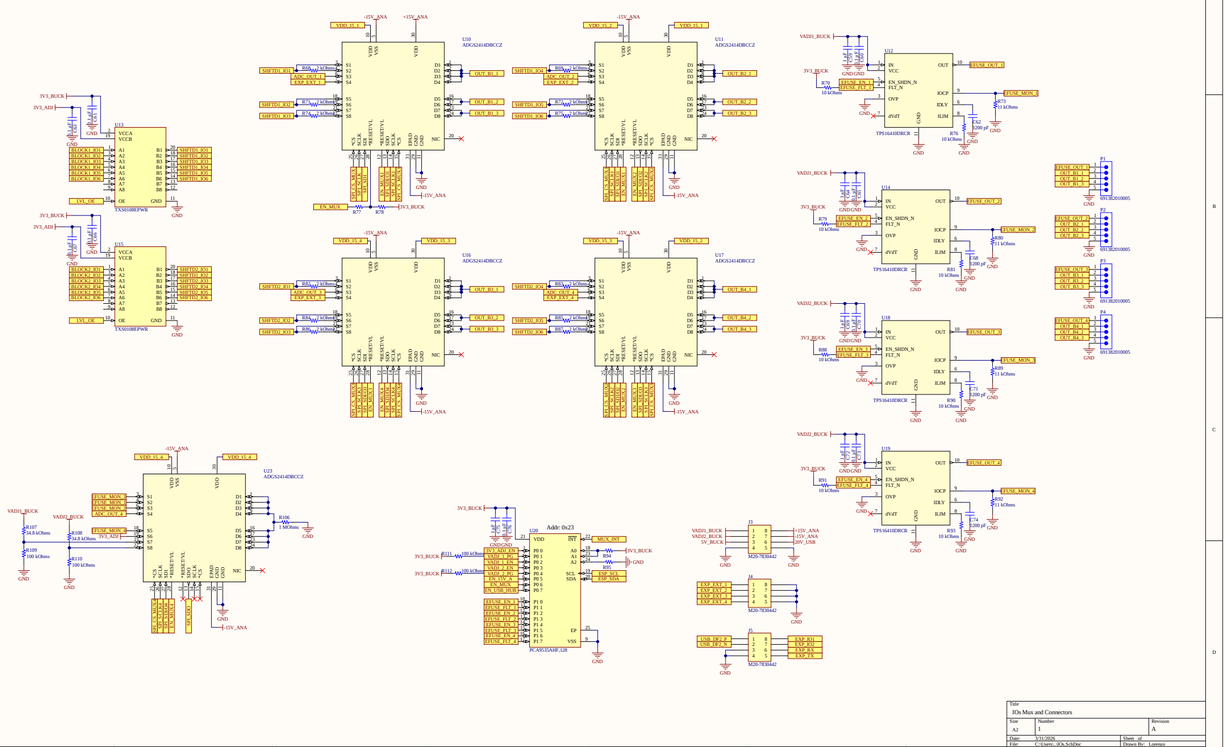

Title:		
IO's Mux and Connectors		
Size: A2	Number: 1	Revision: A
Date: 1/11/2026		Sheet of
File: C:\Users\IOs\IOMux		Drawn By: Lorenzo